M20 | 1P + N

Type 2

Description

- ▶ Surge protection for Main Distribution Board (MDB).
- ▶ Protection against discharge surge energy.
- ▶ Suitable for TT and TN-S system.

60 MONTHS WARRANTY
Terms & Conditions Apply

Applications

Approval / Marking

CB Tested by: TÜVRheinland® RoHS

Technical Parameters

Models	M20/1+1	M20/1+1/A
Design according to	IEC 61643-11 Class II, Type 2	
Poles	1P + N	
Nominal operating voltage (~) U_n	230V (50/60Hz)	
Maximum continuous voltage (~) U_c [L-N/N-PE]	320V/255V (50/60Hz)	
Nominal discharge current (8/20µs) I_n (L-N)	10kA	
Maximum discharge current (8/20µs) I_{max} (L-N)	20kA	
Voltage protection level U_P (L-N/N-PE)	≤1.5kV/≤1.5kV	
Short-circuit current rating (~) I_{SCCR}	25kA	
Maximum disconnector rating (fuse/MCB)	125A gG/100A	
Temporary overvoltage TOV-withstand U_T (L-N)	400V/5s	
Temporary overvoltage TOV-safe failure U_T (L-N)	520V/120min.	
Temporary overvoltage TOV-withstand U_T (N-PE)	1200V/200ms	
Leakage current I_{PE}	None	
Response time t_A	≤25ns	
Operating temperature range T_U	-40°C to +80°C	
Auxiliary Terminal (Remote Signalling)	None	Terminal 11 & 12: Normally Close [NC] Terminal 11 & 14: Normally Open [NO]
Status / Fault indication	Green/Blue: ok; Red: Replace	
Structure type	Modular	
Enclosure	IP20 ; Thermoplastic UL94-V0	

Dimensions (mm)

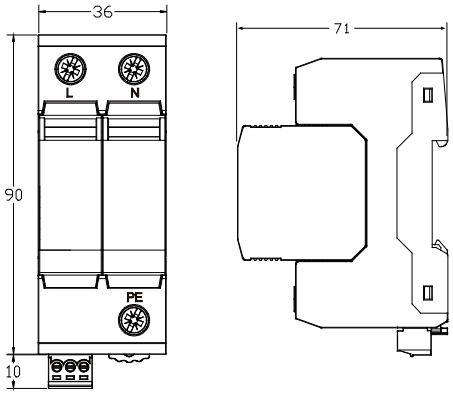

Schematic

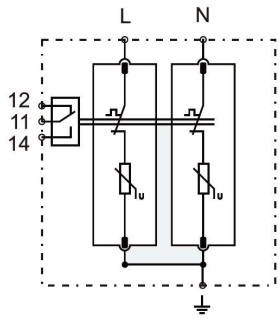

SCAN ME
OPERATING MANUAL

Edition : 2026 JANUARY

M20 | 3P + N

Type 2

Description

- ▶ Surge protection for Main Distribution Board (MDB).
- ▶ Protection against discharge surge energy.
- ▶ Suitable for TT and TN-S system.

60 MONTHS WARRANTY * Terms & Conditions Apply

Applications

Approval / Marking

CB Tested by: TÜVRheinland® RoHS

Technical Parameters

Models	M20/3+1	M20/3+1/A
Design according to	IEC 61643-11 Class II, Type 2	
Poles	3P + N	
Nominal operating voltage (~) U_n	230V/400V (50/60Hz)	
Maximum continuous voltage (~) U_c [L-N/N-PE]	320V/255V (50/60Hz)	
Nominal discharge current (8/20µs) I_n (L-N)	10kA	
Maximum discharge current (8/20µs) I_{max} (L-N)	20kA	
Voltage protection level U_P (L-N/N-PE)	≤1.5kV/≤1.5kV	
Short-circuit current rating (~) I_{SCCR}	25kA	
Maximum disconnector rating (fuse/MCB)	200A gG/100A	
Temporary overvoltage TOV-withstand U_T (L-N)	400V/5s	
Temporary overvoltage TOV-safe failure U_T (L-N)	520V/120min	
Temporary overvoltage TOV-withstand U_T (N-PE)	1200V/200ms	
Leakage current I_{PE}	None	
Response time t_A	≤25ns	
Operating temperature range T_U	-40°C to +80°C	
Auxiliary Terminal (Remote Signalling)	None	Terminal 11 & 12: Normally Close [NC] Terminal 11 & 14: Normally Open [NO]
Status / Fault indication	Green/Blue: ok; Red: Replace	
Structure type	Modular	
Enclosure	IP20 ; Thermoplastic UL94-V0	

Dimensions (mm)

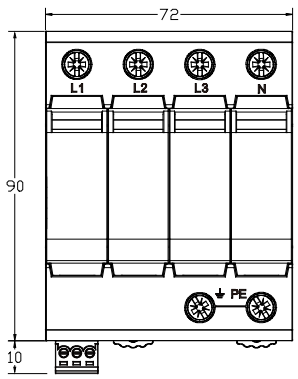

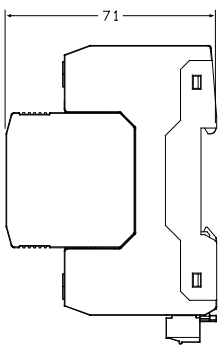

Schematic

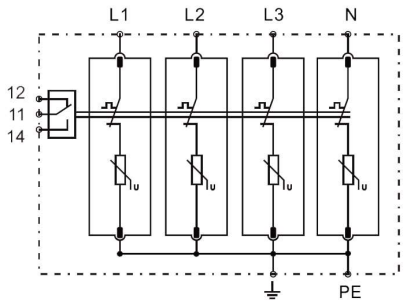

SCAN ME OPERATING MANUAL