M110 | 3P + N

Type 2

MAXGUARD®
SAFE AND SAVE Since 1998

Description

- ▶ Surge protection for Distribution Board (DB)
- ▶ Protection against discharge surge energy.
- ▶ Suitable for TT and TN-S system.

60 MONTHS WARRANTY
Terms & Conditions Apply

Applications

Approval / Marking

CB Tested by: TÜVRheinland® RoHS

Technical Parameters

Models	M110/3+1/A
Design according to	IEC 61643-11 Class II, Type 2
Poles	3P + N
Nominal operating voltage (~) U_n	230V/400V (50/60Hz)
Maximum continuous voltage (~) U_c [L-N/N-PE]	320V/255V (50/60Hz)
Nominal discharge current (8/20μs) I_n (L-N)	50kA
Maximum discharge current (8/20μs) I_{max} (L-N)	110kA
Voltage protection level U_P (L-N/N-PE)	≤2.0kV
Short-circuit current rating (~) I_{SCCR}	25kA
Maximum disconnector rating (fuse/MCB)	160A gG/100A
Temporary overvoltage TOV-withstand U_T (L-N)	400V/5s
Temporary overvoltage TOV-safe failure U_T (L-N)	520V/120min.
Temporary overvoltage TOV-withstand U_T (N-PE)	1200V/200ms
Follow current extinguishing capability (~) U_T (N-PE)	100Arms
Leakage current I_{PE}	None
Response time t_A	≤25ns/≤100ns
Operating temperature range T_U	-40°C to +80°C
Auxiliary Terminal (Remote Signalling)	Terminal 11 & 12: Normally Close [NC] Terminal 11 & 14: Normally Open [NO]
Status / Fault indication	Green/Blue: ok; Red: Replace
Structure type	Modular
Enclosure	IP20 ; Thermoplastic UL94-V0

Dimensions (mm)

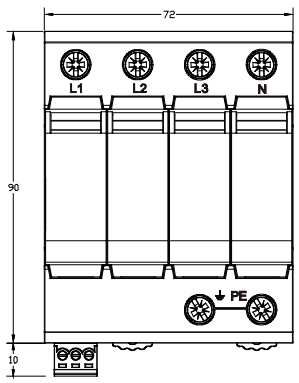

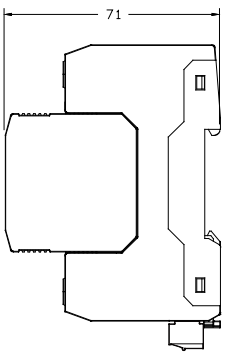

Schematic

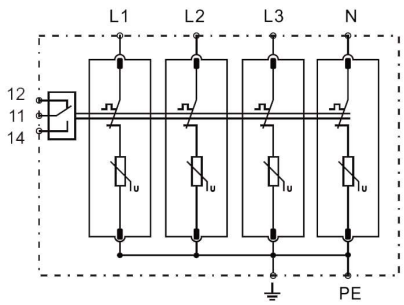

SCAN ME
OPERATING MANUAL